Door Lock Control (LHD)

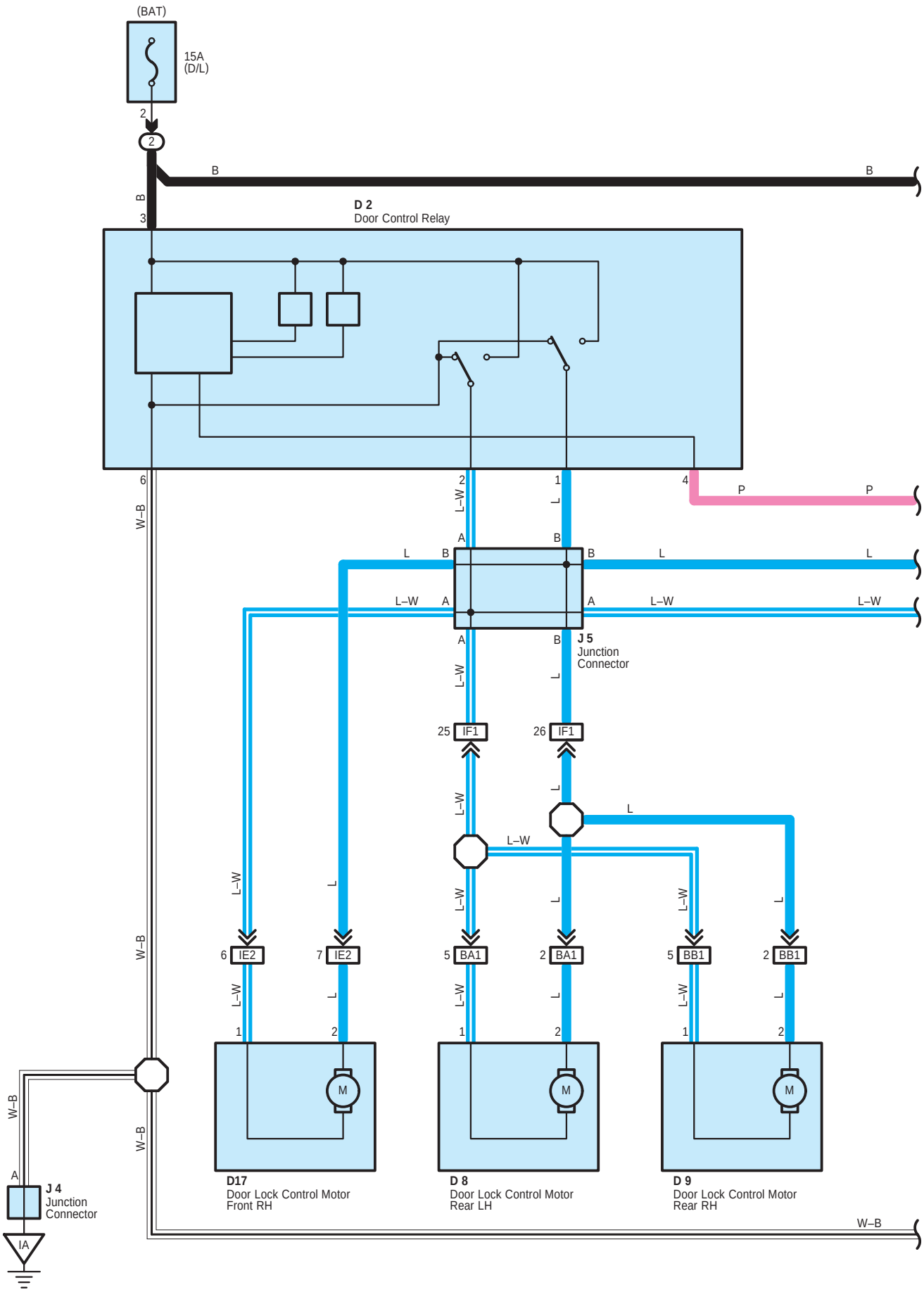

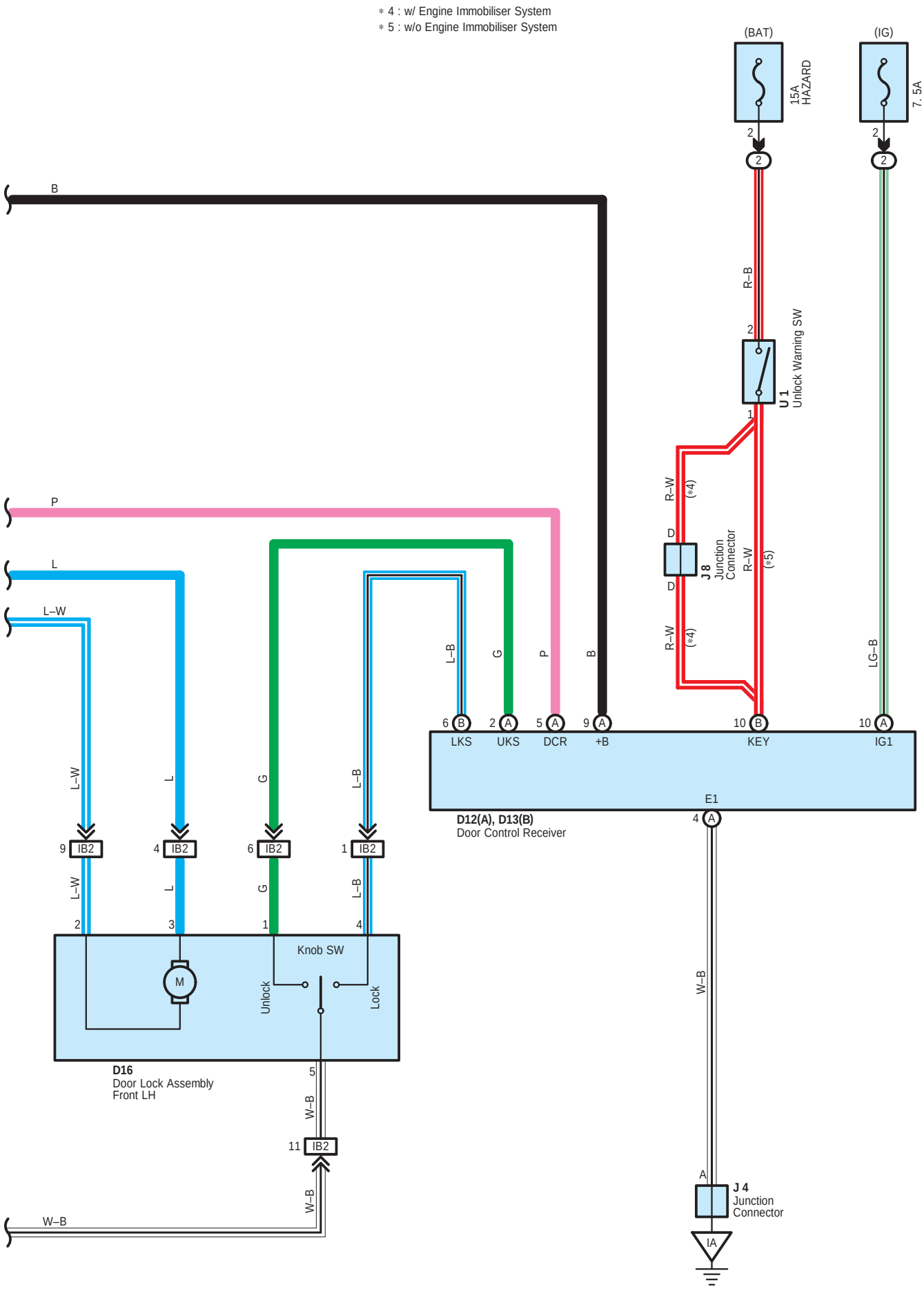
* 4 : w/ Engine Immobiliser System
* 5 : w/o Engine Immobiliser System
(BAT)
15A
HAZARD
(IG)
7. 5A
IG1/BACK
B
R–B
U 1
Unlock Warning SW
R–W
(*4)
J 8
Junction
Connector
(*5)
LG–B
P
L
L–W
L–B
G
6 B
LKS
2 A
UKS
5 A
DCR
9 A
+B
10 B
KEY
10 A
IG1
E1
4 A
D12(A), D13(B)
Door Control Receiver
9 IB2
4 IB2
6 IB2
1 IB2
2
3
1
4
Knob SW
M
Unlock
Lock
D16
Door Lock Assembly
Front LH
5
W–B
11 IB2
A
J 4
Junction
Connector
IA

Door Lock Control (LHD)

System Outline

1. Manual Lock Operation

When the driver's side door lock knob SW is operated to LOCK position, a lock signal is input to TERMINAL (B) 6 of the door control receiver to TERMINAL (A) 5 to TERMINAL 4 of the door control relay and causes the door control relay to function. The current flows from TERMINAL 3 of the door control relay to TERMINAL 2 to the door lock motors to TERMINAL 1 of the door control relay to TERMINAL 6 to GROUND and the door lock motors locks the door.

2. Manual Unlock Operation

When the driver's side door lock knob SW is operated to UNLOCK position, an unlock signal is input to TERMINAL (A) 2 of the door control receiver to TERMINAL (A) 5 to TERMINAL 4 of the door control relay and causes the door control relay to function. The current flows from TERMINAL 3 of the door control relay to TERMINAL 1 to the door lock motors to TERMINAL 2 of the door control relay to TERMINAL 6 to GROUND and the door lock motors unlocks the door.

: Parts Location

Code	See Page	Code	See Page	Code	See Page
D2	28 (LHD)	D13 B	28 (LHD)	J5	29 (LHD)
D8	30 (LHD)	D16	30 (LHD)	J8	29 (LHD)
D9	30 (LHD)	D17	30 (LHD)	U1	29 (LHD)
D12 A	28 (LHD)	J4	29 (LHD)		

: Relay Blocks

Code	See Page	Relay Blocks (Relay Block Location)
2	23 (LHD)	Fuse Block (Left Kick Panel)

: Connector Joining Wire Harness and Wire Harness

Code	See Page	Joining Wire Harness and Wire Harness (Connector Location)
IB2	44 (LHD)	Front Door LH Wire and Instrument Panel Wire (Left Kick Panel)
IE2	44 (LHD)	Front Door RH Wire and Instrument Panel Wire (Right Kick Panel)
IF1	44 (LHD)	Instrument Panel Wire and Floor Wire (Left Kick Panel)
BA1	45 (LHD)	Rear Door No.1 Wire LH and Floor Wire (Center Pillar LH)
BB1	45 (LHD)	Rear Door No.1 Wire RH and Floor Wire (Center Pillar RH)

: Ground Points

Code	See Page	Ground Points Location
IA	44 (LHD)	Right Kick Panel